Appendix 2-A
Devil's Canyon Road Site Drawings

DRAWING NUMBER	REFERENCE DRAWING DESCRIPTION

EQUIPMENT LIST	
EQUIPMENT ID	EQUIPMENT DESCRIPTION
PACKAGE EQUIPMENT	
1	GAS COMPRESSORS (QTY 2)
2	ELECTRIC-DRIVEN GAS COMPRESSORS (QTY 2)
3	INSTRUMENT AIR COMPRESSOR SKID
4	STARTING AIR COMPRESSOR SKID
5	EMERGENCY GENERATOR SKID
6	BLOWDOWN STACK
EXCHANGERS	
7	DISCHARGE COOLERS (QTY 4)
8	AUXILIARY WATER COOLER
9	JACKET WATER COOLER
10	EDC LUBE OIL EXCHANGER MOTOR COOLER (QTY 2)
VESSELS	
11	GENERATOR FUEL GAS REGULATOR FILTER
12	FILTER/SEPARATORS (QTY 2)
13	DISCHARGE SCRUBBER
14	STARTING AIR RECEIVER
15	OILY WASTE STORAGE DRUM
16	ENGINE OIL STORAGE DRUM
17	WASTE OIL STORAGE DRUM
18	INSTRUMENT AIR RECEIVER
19	CONDENSATE DRIP DRUM
20	COOLANT STORAGE DRUM
21	COMPRESSOR FUEL GAS REGULATOR FILTER
22	COMPRESSOR AREA OILY WASTE TANK
23	COMPRESSOR AREA OIL WASTE TANK
24	COMPRESSOR AREA COOLANT DRAIN SUMP
25	WATER STORAGE TANK
PUMPS	
26	ENGINE OIL CHARGE PUMP
27	COMPRESSOR AREA OILY WASTE TANK PUMP
28	WASTE OIL TANK PUMP
29	COMPRESSOR ENGINE WASTE COOLANT PUMP
30	COOLANT CHARGE PUMP
31	FIRE WATER PUMP
MISC	
32	INLET AIR FILTERS (QTY 2)
33	CATALYTIC CONVERTER (QTY 2)
34	EXHAUST SILENCER (QTY 2)
35	INLET SILENCER (QTY 2)
36	VAPOR RECOVERY UNITS (QTY 2)

LEGEND

- PEA STATION SITE
- ROAD CENTERLINE
- EDGE OF FACILITY / ACCESS ROAD
- E — SCE ELECTRICAL INTERCONNECT
- E — SCE ELECTRICAL INTERCONNECT BURIED
- WW — WASTEWATER LINE
- W — WATERLINE
- G — NEW GAS PIPELINE

NOTES:

1. SITE SPECIFIC SURVEY HAS NOT BEEN PERFORMED. DESIGN WAS DEVELOPED BASED ON PUBLICLY AVAILABLE TOPOGRAPHY. TOPOGRAPHY IS FROM AUTODESK INFRAWORKS MARCH-JUNE, 2025
2. DESIGN WAS DEVELOPED USING PUBLICLY AVAILABLE INFORMATION AND AERIAL IMAGERY. AERIAL IMAGERY IS FROM AUTOCAD CIVIL 3D JUNE, 2025
3. ASSUMPTIONS WILL NEED TO BE VALIDATED DURING THE SUBSEQUENT DESIGN PHASE.

0 50' 100'
SCALE: 1" = 50'-0"

REV	DATE	DRAWN	CHECKED	PRJ APV	SCG APV	ENG FILE NO	DESCRIPTION	WOA
0	06/26/2025	MCR	SLH				ISSUED FOR DR-001 RESPONSE	

	BY	DATE
DESIGNED:	S.HOPE	03/10/25
DRAWN:	M.RIZO	03/10/25
CHECKED:	S.HOPE	03/28/25
PROJ APV:		
SCG ENG APV:		
ENG FILE NO:		
WOA:		

SoCalGas
A Sempra Energy utility

DWG CLASS: 9,39 DWG DIST: 114
SCALE: 1" =50'-0"

VENTURA COMPRESSOR STATION MODERNIZATION PROJECT DEVIL'S CANYON ROAD SITE CONCEPTUAL PLOT PLAN

DRAWING NUMBER 152084-3002-D-SKT REV 0

C:\Users\mcrizo\Burns & McDonnell\SoCalGas Ventura EPC Execution - Documents\CPUC Support\2025 Support\Design\CAD\Mech\XXXXXX-3001-D-SKT_Rev11.dwg, 8/28/2025 4:14 PM, Rizo, Mike C.

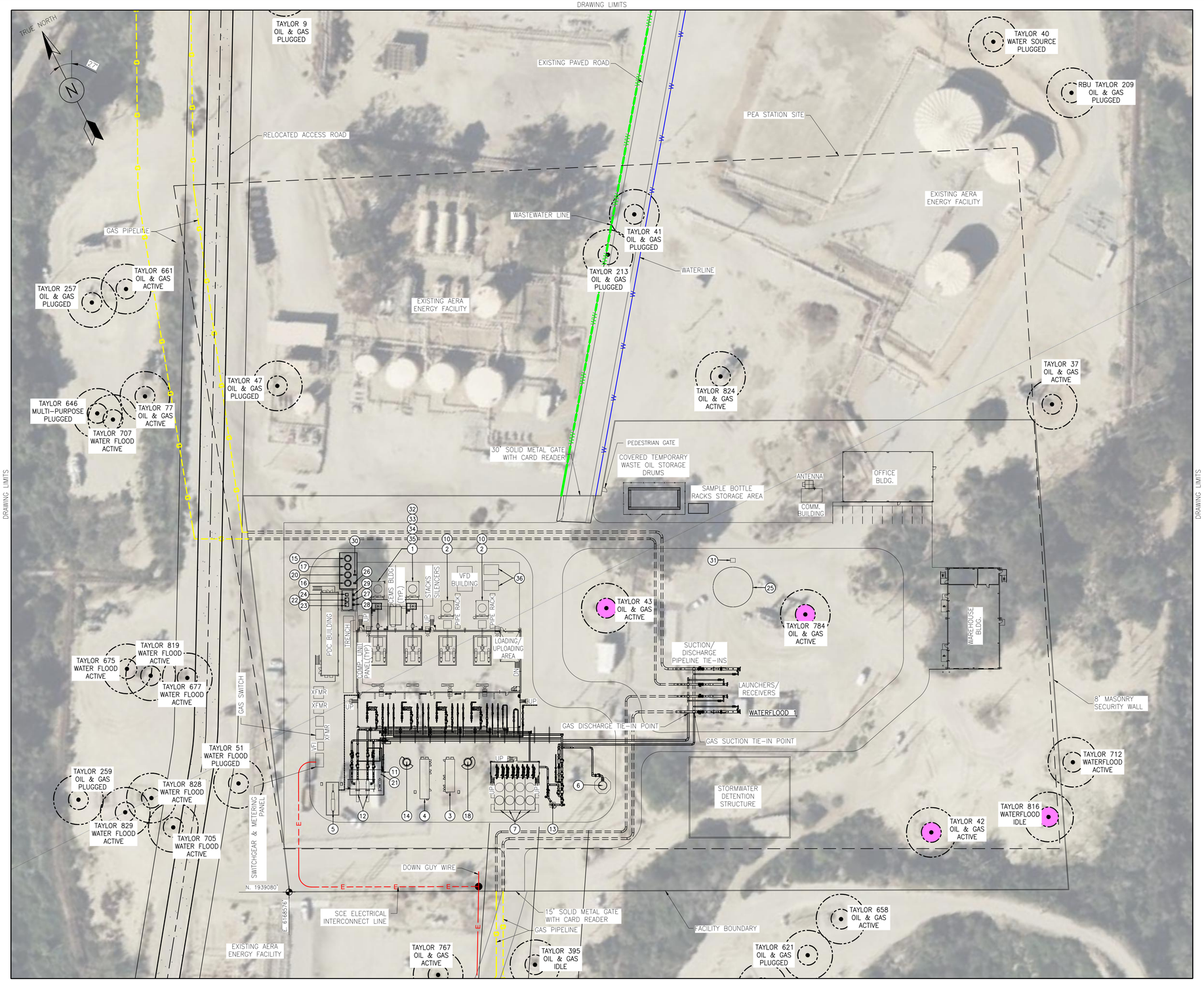

DRAWING NUMBER	REFERENCE DRAWING DESCRIPTION

EQUIPMENT LIST

EQUIPMENT ID	EQUIPMENT DESCRIPTION
PACKAGE EQUIPMENT	
1	GAS COMPRESSORS (QTY 2)
2	ELECTRIC-DRIVEN GAS COMPRESSORS (QTY 2)
3	INSTRUMENT AIR COMPRESSOR SKID
4	STARTING AIR COMPRESSOR SKID
5	EMERGENCY GENERATOR SKID
6	BLOWDOWN STACK
EXCHANGERS	
7	DISCHARGE COOLERS (QTY 4)
8	AUXILIARY WATER COOLER
9	JACKET WATER COOLER
10	EDC LUBE OIL EXCHANGER MOTOR COOLER (QTY 2)
VESSELS	
11	GENERATOR FUEL GAS REGULATOR FILTER
12	FILTER/SEPARATORS (QTY 2)
13	DISCHARGE SCRUBBER
14	STARTING AIR RECEIVER
15	OILY WASTE STORAGE DRUM
16	ENGINE OIL STORAGE DRUM
17	WASTE OIL STORAGE DRUM
18	INSTRUMENT AIR RECEIVER
19	CONDENSATE DRIP DRUM
20	COOLANT STORAGE DRUM
21	COMPRESSOR FUEL GAS REGULATOR FILTER
22	COMPRESSOR AREA OILY WASTE TANK
23	COMPRESSOR AREA OIL WASTE TANK
24	COMPRESSOR AREA COOLANT DRAIN SUMP
25	WATER STORAGE TANK
PUMPS	
26	ENGINE OIL CHARGE PUMP
27	COMPRESSOR AREA OILY WASTE TANK PUMP
28	WASTE OIL TANK PUMP
29	COMPRESSOR ENGINE WASTE COOLANT PUMP
30	COOLANT CHARGE PUMP
31	FIRE WATER PUMP
MISC	
32	INLET AIR FILTERS (QTY 2)
33	CATALYTIC CONVERTER (QTY 2)
34	EXHAUST SILENCER (QTY 2)
35	INLET SILENCER (QTY 2)
36	VAPOR RECOVERY UNITS (QTY 2)

LEGEND

- PEA STATION SITE
- ROAD CENTERLINE
- EDGE OF FACILITY / ACCESS ROAD
- E — SCE ELECTRICAL INTERCONNECT
- E — SCE ELECTRICAL INTERCONNECT BURIED
- WW — WASTEWATER LINE
- W — WATERLINE
- G — NEW GAS PIPELINE
- WELL WITH 10' AND 25' BUFFER AND TO BE PLUGGED AND RE-ABANDONED
- WELL WITH 10' AND 25' BUFFER AND TO BE LEFT AS IS

NOTES:

1. SITE SPECIFIC SURVEY HAS NOT BEEN PERFORMED. DESIGN WAS DEVELOPED BASED ON PUBLICLY AVAILABLE TOPOGRAPHY. TOPOGRAPHY IS FROM AUTODESK INFRAWORKS MARCH-JUNE, 2025
2. DESIGN WAS DEVELOPED USING PUBLICLY AVAILABLE INFORMATION AND AERIAL IMAGERY. AERIAL IMAGERY IS FROM AUTOCAD CIVIL 3D JUNE, 2025
3. ASSUMPTIONS WILL NEED TO BE VALIDATED DURING THE SUBSEQUENT DESIGN PHASE.

0 50' 100'
SCALE: 1" = 50'-0"

REV	DATE	DRAWN	CHECKED	PRJ APV	SCG APV	ENG FILE NO	DESCRIPTION	WOA
0	06/26/2025	MCR	SLH				ISSUED FOR DR-001 RESPONSE	

	BY	DATE
DESIGNED:	S.HOPE	03/10/25
DRAWN:	M.RIZO	03/10/25
CHECKED:	S.HOPE	03/28/25
PROJ APV:		
SCG ENG APV:		
ENG FILE NO:		
WOA:		

SoCalGas
A Sempra Energy utility

DWG CLASS: 9,39 DWG DIST: 114
SCALE: 1" =50'-0"

VENTURA COMPRESSOR STATION MODERNIZATION PROJECT DEVIL'S CANYON ROAD SITE CONCEPTUAL PLOT PLAN WITH WELLS

DRAWING NUMBER 152084-3004-D-SKT REV 0

C:\Users\mcrizo\Burns & McDonnell\SoCalGas Ventura EPC Execution - Documents\CPUC Support\2025 Support\Design\CAD\Mech\XXXXXX-3001-D-SKT_Rev11.dwg, 8/28/2025 4:17 PM, Rizo, Mike C.

DRAWING NUMBER	REFERENCE DRAWING DESCRIPTION
152084-7121-D-SKT	ROAD & UTILITY TRENCH DETAILS

LEGEND

- PEA STATION SITE
- ROAD CENTERLINE
- EDGE OF FACILITY / ACCESS ROAD
- AGGREGATE SURFACING
- ASPHALT OR OTHER PAVEMENT
- 25'x25' TRAFFIC SAFETY BARRIER

NOTES:

1. SITE SPECIFIC SURVEY HAS NOT BEEN PERFORMED. DESIGN WAS DEVELOPED BASED ON PUBLICLY AVAILABLE TOPOGRAPHY. TOPOGRAPHY IS FROM AUTODESK INFRAWORKS MARCH–JUNE, 2025
2. DESIGN WAS DEVELOPED USING PUBLICLY AVAILABLE INFORMATION AND AERIAL IMAGERY. AERIAL IMAGERY IS FROM AUTOCAD CIVIL 3D JUNE, 2025
3. ASSUMPTIONS WILL NEED TO BE VALIDATED DURING THE SUBSEQUENT DESIGN PHASE.

0 200' 400'
SCALE: 1" = 200'–0"

REV	DATE	DRAWN	CHECKED	PRJ APV	SCG APV	ENG FILE NO	DESCRIPTION	WOA
0	06/26/2025	MCR	JBB				ISSUED FOR DR-001 RESPONSE	

	BY	DATE
DESIGNED:	J.BAKKER	06/15/25
DRAWN:	M.RIZO	06/15/25
CHECKED:	S.HOPE	06/20/25
PROJ APV:		
SCG ENG APV:		
ENG FILE NO:		
WOA:		

SoCalGas
A Sempra Energy utility

DWG CLASS: 9,39 DWG DIST: 114
SCALE: AS SHOWN

VENTURA COMPRESSOR STATION MODERNIZATION PROJECT DEVIL'S CANYON ROAD SITE CONCEPTUAL OVERALL SURFACING PLAN

DRAWING NUMBER 152084-7021-D-SKT REV 0

C:\Users\mcrizo\Burns & McDonnell\SoCalGas Ventura EPC Execution – Documents\CPUC Support\2025 Support\Design\Civil – Structural\CAD\Devils Canyon\152084-7021-D-SKT.dwg, 8/22/2025 2:17 PM, Rizo, Mike C.

DRAWING NUMBER	REFERENCE DRAWING DESCRIPTION

LEGEND

- PEA STATION SITE
- ROAD CENTERLINE
- EDGE OF FACILITY / ACCESS ROAD
- AGGREGATE SURFACING
- ASPHALT OR OTHER PAVEMENT

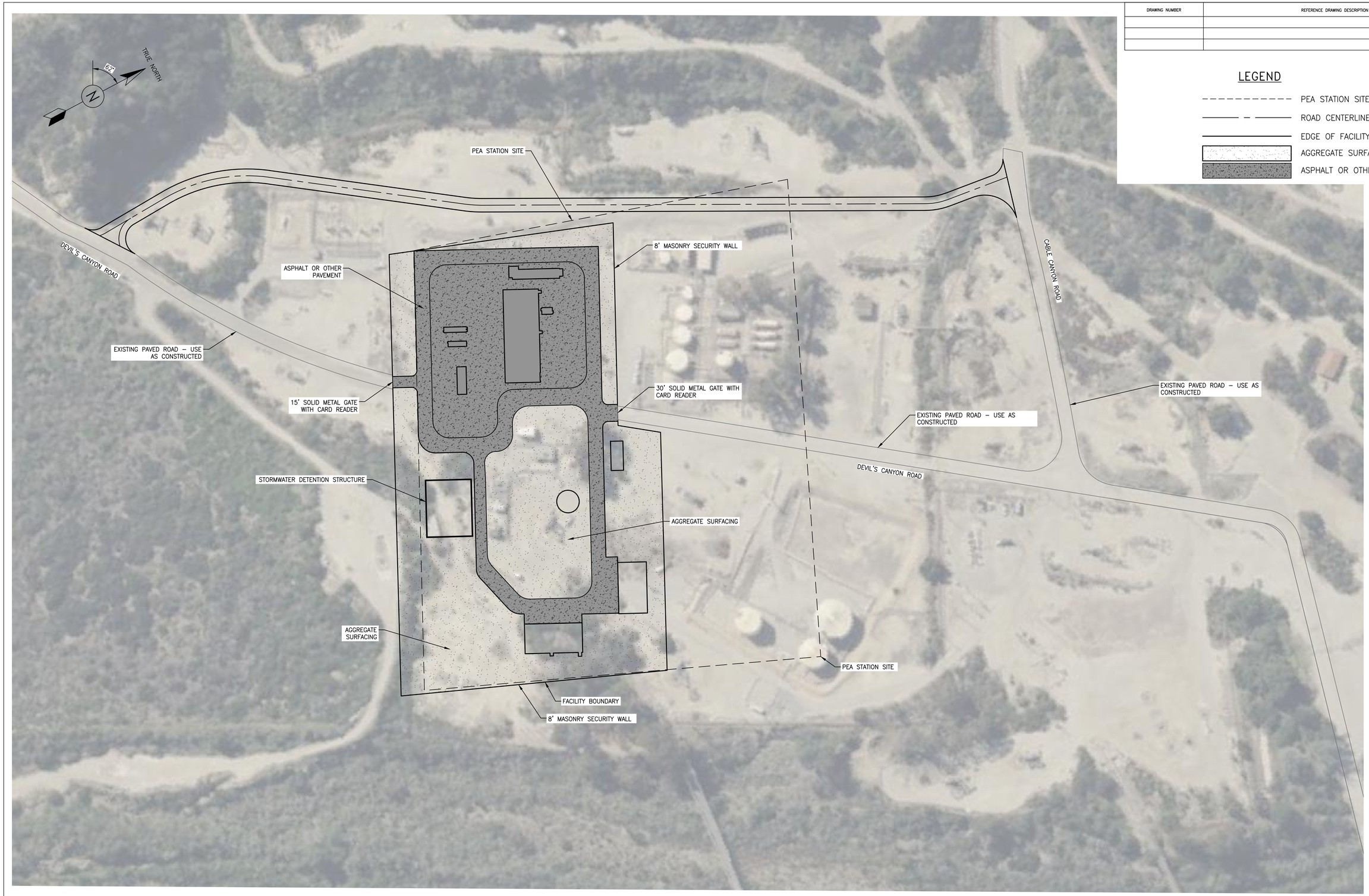

NOTES:

1. SITE SPECIFIC SURVEY HAS NOT BEEN PERFORMED. DESIGN WAS DEVELOPED BASED ON PUBLICLY AVAILABLE TOPOGRAPHY. TOPOGRAPHY IS FROM AUTODESK INFRAWORKS MARCH–JUNE, 2025
2. DESIGN WAS DEVELOPED USING PUBLICLY AVAILABLE INFORMATION AND AERIAL IMAGERY. AERIAL IMAGERY IS FROM AUTOCAD CIVIL 3D JUNE, 2025
3. ASSUMPTIONS WILL NEED TO BE VALIDATED DURING THE SUBSEQUENT DESIGN PHASE.

0 40' 80' 160'
SCALE: 1" = 80'–0"

REV	DATE	DRAWN	CHECKED	PRJ APV	SCG APV	ENG FILE NO	DESCRIPTION	WOA
0	06/26/2025	MCR	JBB				ISSUED FOR DR–001 RESPONSE	

BY	DATE
DESIGNED: J.BAKKER	06/15/25
DRAWN: M.RIZO	06/15/25
CHECKED: S.HOPE	06/20/25
PROJ APV:	
SCG ENG APV:	
ENG FILE NO:	
WOA:	

SoCalGas
A Sempra Energy utility

DWG CLASS: 9,39 DWG DIST: 114
SCALE: AS SHOWN

VENTURA COMPRESSOR STATION
MODERNIZATION PROJECT
DEVIL'S CANYON ROAD SITE
CONCEPTUAL SITE SURFACING PLAN

DRAWING NUMBER 152084–7022–D–SKT

REV 0

C:\Users\mcrizo\Burns & McDonnell\SoCalGas Ventura EPC Execution – Documents\CPUC Support\2025 Support\Design\Civil – Structural\CAD\Devils Canyon\152084–7022–D–SKT.dwg, 6/30/2025 6:42 AM, Rizo, Mike C.

DRAWING NUMBER	REFERENCE DRAWING DESCRIPTION

LEGEND

- PEA STATION SITE
- EDGE OF FACILITY / ACCESS ROAD
- 5530 EXISTING MAJOR CONTOUR
- 5531 EXISTING MINOR CONTOUR

NOTES:

1. SITE SPECIFIC SURVEY HAS NOT BEEN PERFORMED. DESIGN WAS DEVELOPED BASED ON PUBLICLY AVAILABLE TOPOGRAPHY. TOPOGRAPHY IS FROM AUTODESK INFRAWORKS MARCH–JUNE, 2025
2. DESIGN WAS DEVELOPED USING PUBLICLY AVAILABLE INFORMATION AND AERIAL IMAGERY. AERIAL IMAGERY IS FROM AUTOCAD CIVIL 3D JUNE, 2025
3. ASSUMPTIONS WILL NEED TO BE VALIDATED DURING THE SUBSEQUENT DESIGN PHASE.

0 20' 40' 80'
SCALE: 1" = 40'–0"

REV	DATE	DRAWN	CHECKED	PRJ APV	SCG APV	ENG FILE NO	DESCRIPTION	WOA
0	06/26/2025	MCR	JBB				ISSUED FOR DR–001 RESPONSE	

BY	DATE
DESIGNED: J.BAKKER	06/15/25
DRAWN: M.RIZO	06/15/25
CHECKED: S.HOPE	06/20/25
PROJ APV:	
SCG ENG APV:	
ENG FILE NO:	
WOA:	

DWG CLASS: 9.39 DWG DIST: 114
SCALE: AS SHOWN

SoCalGas
A Sempra Energy utility

VENTURA COMPRESSOR STATION
MODERNIZATION PROJECT
DEVIL'S CANYON ROAD SITE
CONCEPTUAL GRADING PLAN

DRAWING NUMBER 152084–7023–D–SKT REV 0

C:\Users\mcrizo\Burns & McDonnell\SoCalGas Ventura EPC Execution – Documents\CPUC Support\2025 Support\Design\Civil – Structural\CAD\Devils Canyon\152084–7023–D–SKT.dwg, 8/28/2025 1:25 PM, Rizo, Mike C.

DRAWING NUMBER	REFERENCE DRAWING DESCRIPTION
152084-7121-D-SKT	ROAD & UTILITY TRENCH DETAILS
152084-7722-D-SKT	TWO GAS PIPELINES CORRIDOR DETAIL
152084-5510-D-SKT	ELECTRICAL DIST. INTERCONNECT PRELIMINARY DETAILS

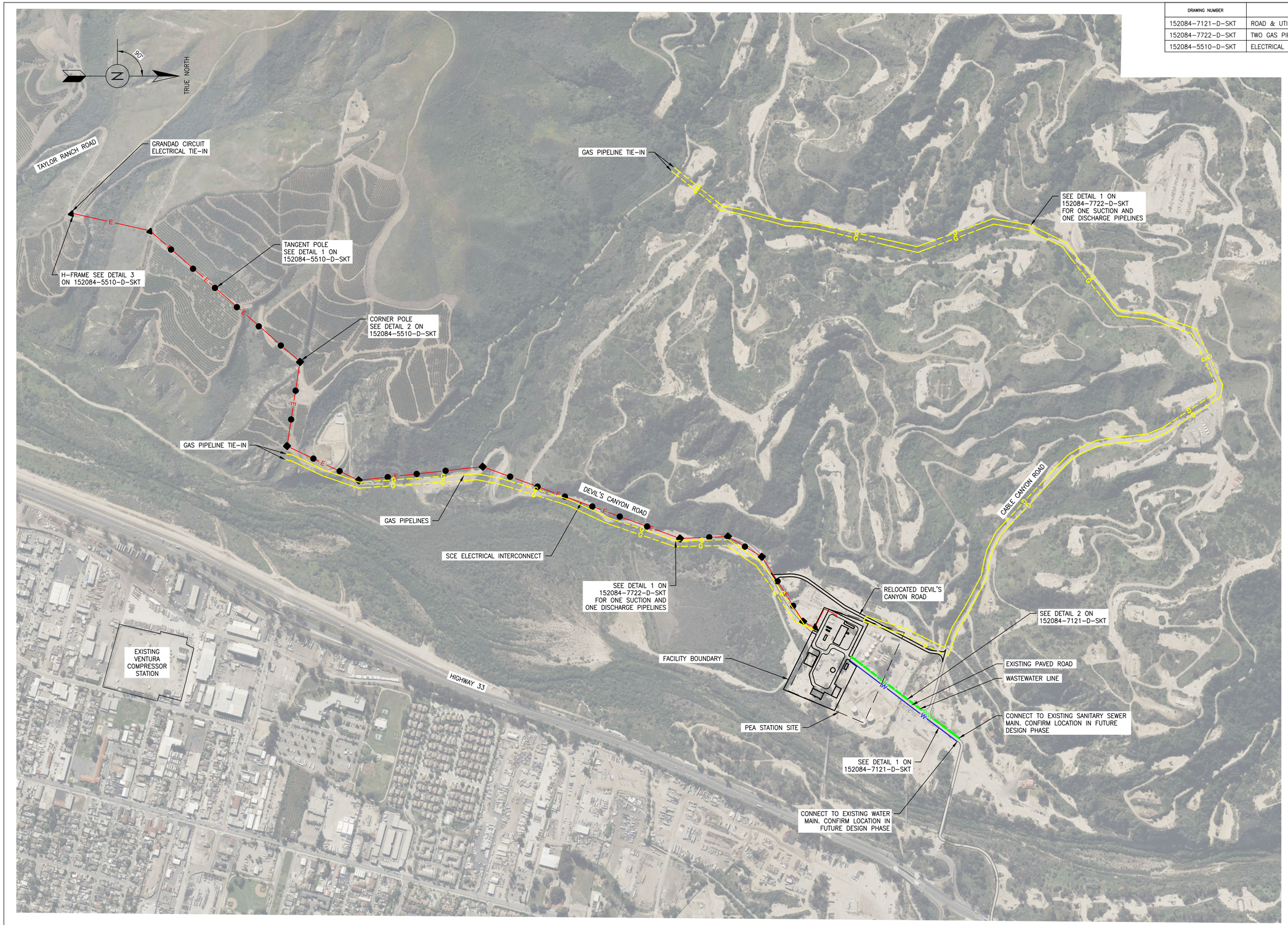

LEGEND

- PEA STATION SITE
- EDGE OF FACILITY / ACCESS ROAD
- WW — WASTEWATER LINE
- W — WATERLINE
- G — NEW GAS PIPELINE
- E — SCE ELECTRICAL INTERCONNECT
- H FRAME
- TANGENT POLE
- CORNER POLE
- DEAD END POLE

NOTES:

1. SITE SPECIFIC SURVEY HAS NOT BEEN PERFORMED. DESIGN WAS DEVELOPED BASED ON PUBLICLY AVAILABLE TOPOGRAPHY. TOPOGRAPHY IS FROM AUTODESK INFRAWORKS MARCH–JUNE, 2025
2. DESIGN WAS DEVELOPED USING PUBLICLY AVAILABLE INFORMATION AND AERIAL IMAGERY. AERIAL IMAGERY IS FROM AUTOCAD CIVIL 3D JUNE, 2025
3. ASSUMPTIONS WILL NEED TO BE VALIDATED DURING THE SUBSEQUENT DESIGN PHASE.

0 400' 800'
SCALE: 1" = 400'-0"

REV	DATE	DRAWN	CHECKED	PRJ APV	SCG APV	ENG FILE NO	DESCRIPTION	WOA
0	06/26/2025	MCR	JBB				ISSUED FOR DR-001 RESPONSE	

BY	DATE
DESIGNED: J.BAKKER	06/15/25
DRAWN: M.RIZO	06/15/25
CHECKED: S.HOPE	06/20/25
PROJ APV:	
SCG ENG APV:	
ENG FILE NO:	
WOA:	

SoCalGas — A Sempra Energy utility

DWG CLASS: 9.39 DWG DIST: 114
SCALE: AS SHOWN

VENTURA COMPRESSOR STATION MODERNIZATION PROJECT DEVIL'S CANYON ROAD SITE CONCEPTUAL PIPELINE & UTILITY PLAN

DRAWING NUMBER 152084-7024-D-SKT REV 0

C:\Users\mcrizo\Burns & McDonnell\SoCalGas Ventura EPC Execution - Documents\CPUC Support\2025 Support\Design\Civil - Structural\CAD\Devils Canyon\152084-7024-D-SKT.dwg, 8/19/2025 11:30 AM, Rizo, Mike C.

DRAWING NUMBER	REFERENCE DRAWING DESCRIPTION

LEGEND

- EDGE OF STAGING AREA
- 5530 — EXISTING MAJOR CONTOUR
- 5531 — EXISTING MINOR CONTOUR
- AGGREGATE SURFACING
- WELL WITH 10' AND 25' BUFFER AND TO BE LEFT AS IS
- WELL WITH 25'x25' TRAFFIC SAFETY BARRIER AND TO BE LEFT AS IS

NOTES:

1. SITE SPECIFIC SURVEY HAS NOT BEEN PERFORMED. DESIGN WAS DEVELOPED BASED ON PUBLICLY AVAILABLE TOPOGRAPHY. TOPOGRAPHY IS FROM AUTODESK INFRAWORKS MARCH–JUNE, 2025
2. DESIGN WAS DEVELOPED USING PUBLICLY AVAILABLE INFORMATION AND AERIAL IMAGERY. AERIAL IMAGERY IS FROM AUTOCAD CIVIL 3D JUNE, 2025
3. ASSUMPTIONS WILL NEED TO BE VALIDATED DURING THE SUBSEQUENT DESIGN PHASE.

0 50' 100'
SCALE: 1" = 50'–0"

REV	DATE	DRAWN	CHECKED	PRJ APV	SCG APV	ENG FILE NO	DESCRIPTION	WOA
0	06/26/2025	MCR	JBB				ISSUED FOR DR–001 RESPONSE	

	BY	DATE
DESIGNED:	J.BAKKER	06/15/25
DRAWN:	M.RIZO	06/15/25
CHECKED:	S.HOPE	06/20/25
PROJ APV:		
SCG ENG APV:		
ENG FILE NO:		
WOA:		

SoCalGas
A Sempra Energy utility

DWG CLASS: 9,39 DWG DIST: 114
SCALE: AS SHOWN

VENTURA COMPRESSOR STATION MODERNIZATION PROJECT
DEVIL'S CANYON ROAD SITE
CONCEPTUAL TEMPORARY STAGING AREA GRADING PLAN

DRAWING NUMBER 152084–7025–D–SKT
REV 0

C:\Users\mcrizo\Burns & McDonnell\SoCalGas Ventura EPC Execution – Documents\CPUC Support\2025 Support\Design\Civil – Structural\CAD\Devils Canyon\152084–7025–D–SKT.dwg, 8/22/2025 12:30 PM, Rizo, Mike C.

DRAWING NUMBER	REFERENCE DRAWING DESCRIPTION

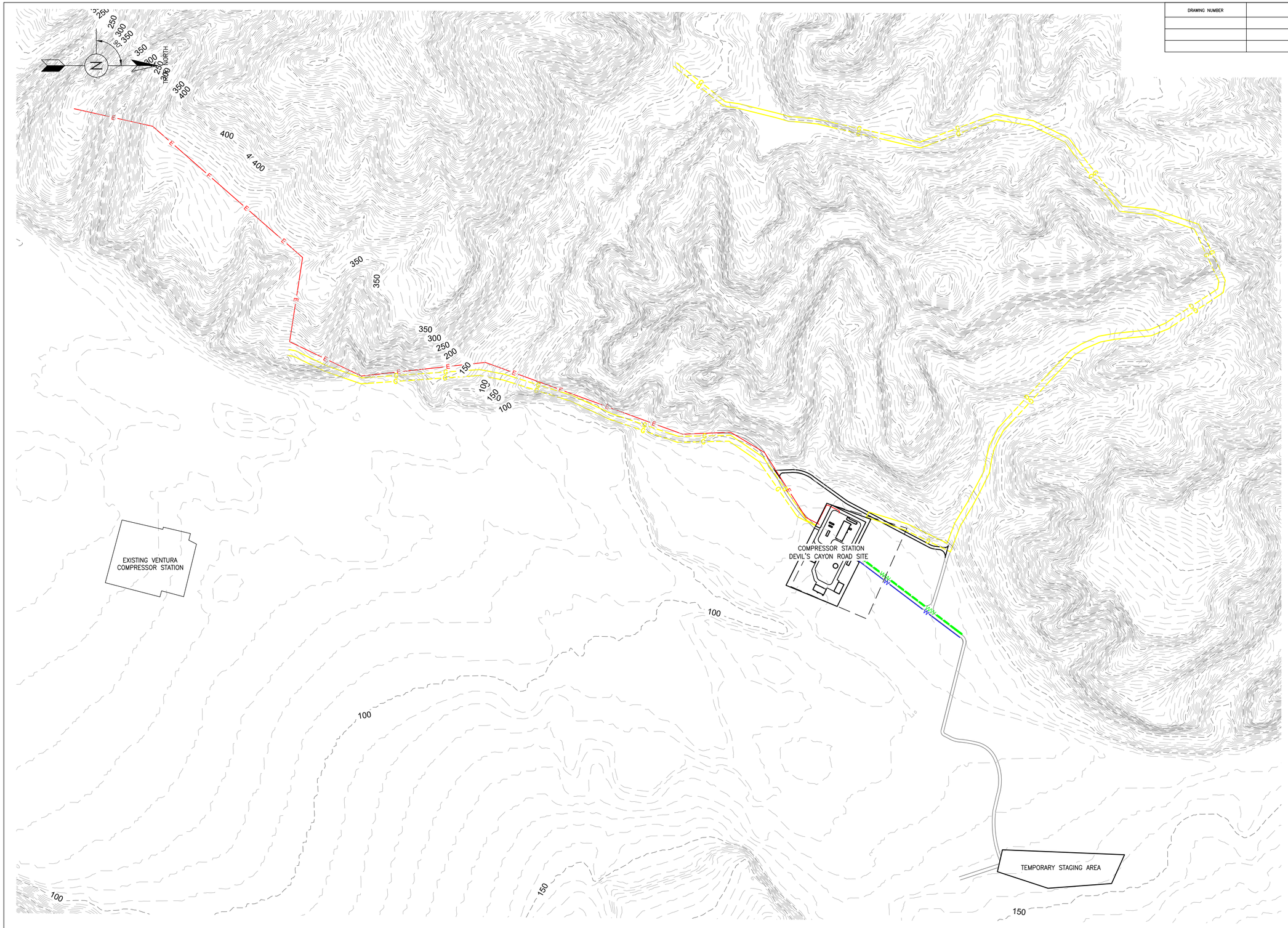

LEGEND

- PEA STATION SITE
- EDGE OF FACILITY / ACCESS ROAD
- E — SCE ELECTRICAL INTERCONNECT
- WW — WASTEWATER LINE
- W — WATERLINE
- G — NEW GAS PIPELINE
- EXISTING MAJOR CONTOUR LINE
- EXISTING MINOR CONTOUR LINE

NOTES:

1. SITE SPECIFIC SURVEY HAS NOT BEEN PERFORMED. DESIGN WAS DEVELOPED BASED ON PUBLICLY AVAILABLE TOPOGRAPHY. TOPOGRAPHY IS FROM AUTODESK INFRAWORKS MARCH–JUNE, 2025
2. DESIGN WAS DEVELOPED USING PUBLICLY AVAILABLE INFORMATION AND AERIAL IMAGERY. AERIAL IMAGERY IS FROM AUTOCAD CIVIL 3D JUNE, 2025
3. ASSUMPTIONS WILL NEED TO BE VALIDATED DURING THE SUBSEQUENT DESIGN PHASE.

0 400' 800'
SCALE: 1" = 400'–0"

REV	DATE	DRAWN	CHECKED	PRJ APV	SCG APV	ENG FILE NO	DESCRIPTION	WOA
0	06/26/2025	MCR	JBB				ISSUED FOR DR–001 RESPONSE	

	BY	DATE
DESIGNED:	J.BAKKER	06/15/25
DRAWN:	M.RIZO	06/15/25
CHECKED:	S.HOPE	06/20/25
PROJ APV:		
SCG ENG APV:		
ENG FILE NO:		
WOA:		

SoCalGas — A Sempra Energy utility

DWG CLASS: 9,39 DWG DIST: 114
SCALE: AS SHOWN

VENTURA COMPRESSOR STATION MODERNIZATION PROJECT DEVIL'S CANYON ROAD SITE CONCEPTUAL TOPOGRAPHIC MAP

DRAWING NUMBER 152084–7026–D–SKT REV 0

C:\Users\mcrizo\Burns & McDonnell\SoCalGas Ventura EPC Execution – Documents\CPUC Support\2025 Support\Design\Civil – Structural\CAD\Devils Canyon\152084–7026–D–SKT.dwg, 8/28/2025 1:35 PM, Rizo, Mike C.

DRAWING NUMBER	REFERENCE DRAWING DESCRIPTION

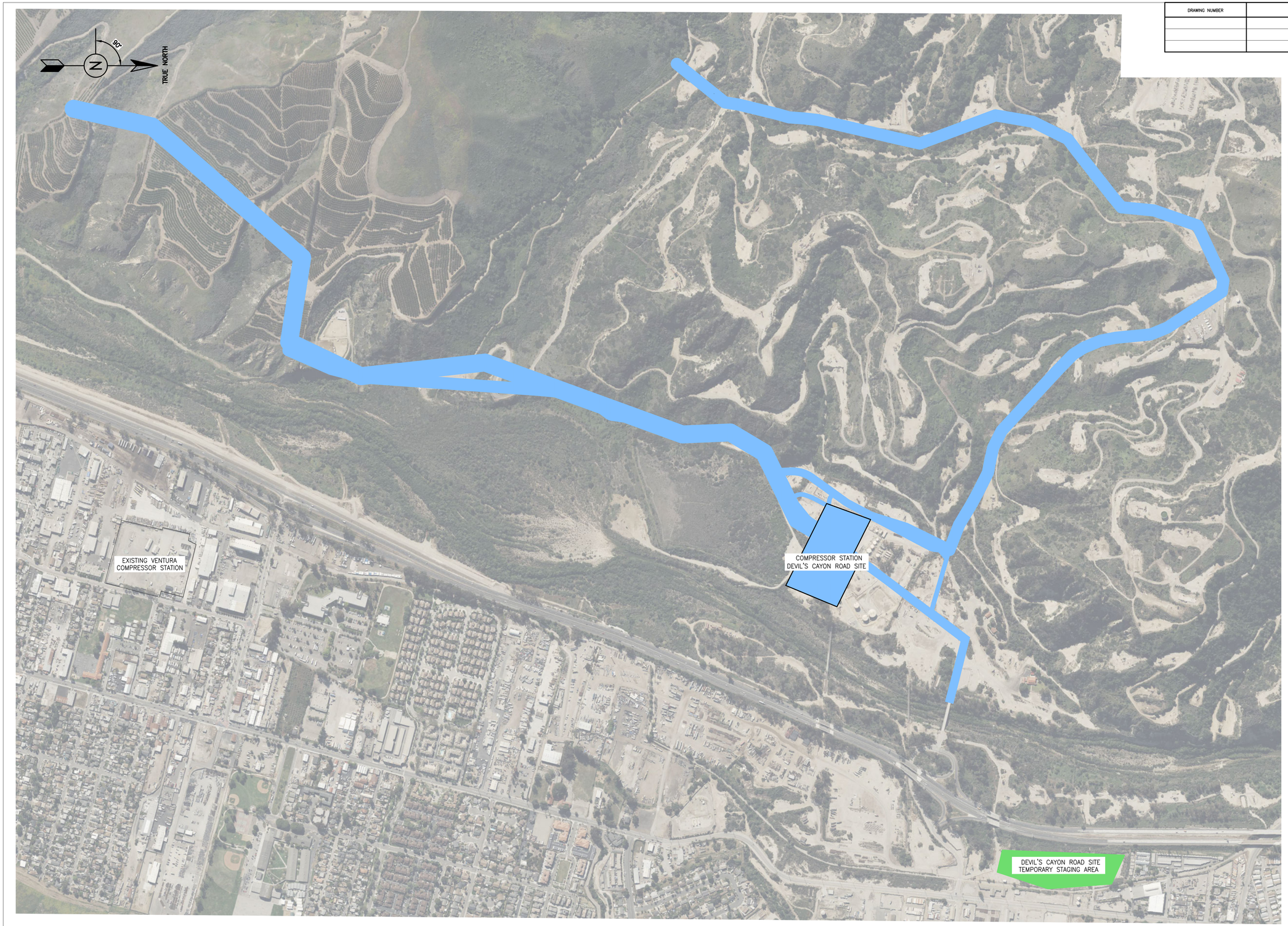

LEGEND

- EDGE OF FACILITY
- PERMANENT LIMITS OF DISTURBANCE
- TEMPORARY LIMITS OF DISTURBANCE

NOTES:

1. SITE SPECIFIC SURVEY HAS NOT BEEN PERFORMED. DESIGN WAS DEVELOPED BASED ON PUBLICLY AVAILABLE TOPOGRAPHY. TOPOGRAPHY IS FROM AUTODESK INFRAWORKS MARCH–JUNE, 2025
2. DESIGN WAS DEVELOPED USING PUBLICLY AVAILABLE INFORMATION AND AERIAL IMAGERY. AERIAL IMAGERY IS FROM AUTOCAD CIVIL 3D JUNE, 2025
3. ASSUMPTIONS WILL NEED TO BE VALIDATED DURING THE SUBSEQUENT DESIGN PHASE.

0 400' 800'
SCALE: 1" = 400'–0"

REV	DATE	DRAWN	CHECKED	PRJ APV	SCG APV	ENG FILE NO	DESCRIPTION	WOA
0	06/26/2025	MCR	JBB				ISSUED FOR DR–001 RESPONSE	

BY:	DATE
DESIGNED: J.BAKKER	06/15/25
DRAWN: M.RIZO	06/15/25
CHECKED: S.HOPE	06/20/25
PROJ APV:	
SCG ENG APV:	
ENG FILE NO:	
WOA:	

SoCalGas
A Sempra Energy utility

DWG CLASS: 9,39 DWG DIST: 114
SCALE: AS SHOWN

VENTURA COMPRESSOR STATION
MODERNIZATION PROJECT
DEVIL'S CANYON ROAD SITE
CONCEPTUAL LIMITS OF DISTURBANCE

DRAWING NUMBER 152084–7027–D–SKT REV 0

C:\Users\mcrizo\Burns & McDonnell\SoCalGas Ventura EPC Execution – Documents\CPUC Support\2025 Support\Design\Civil – Structural\CAD\Devils Canyon\152084–7027–D–SKT.dwg, 8/28/2025 1:14 PM, Rizo, Mike C.

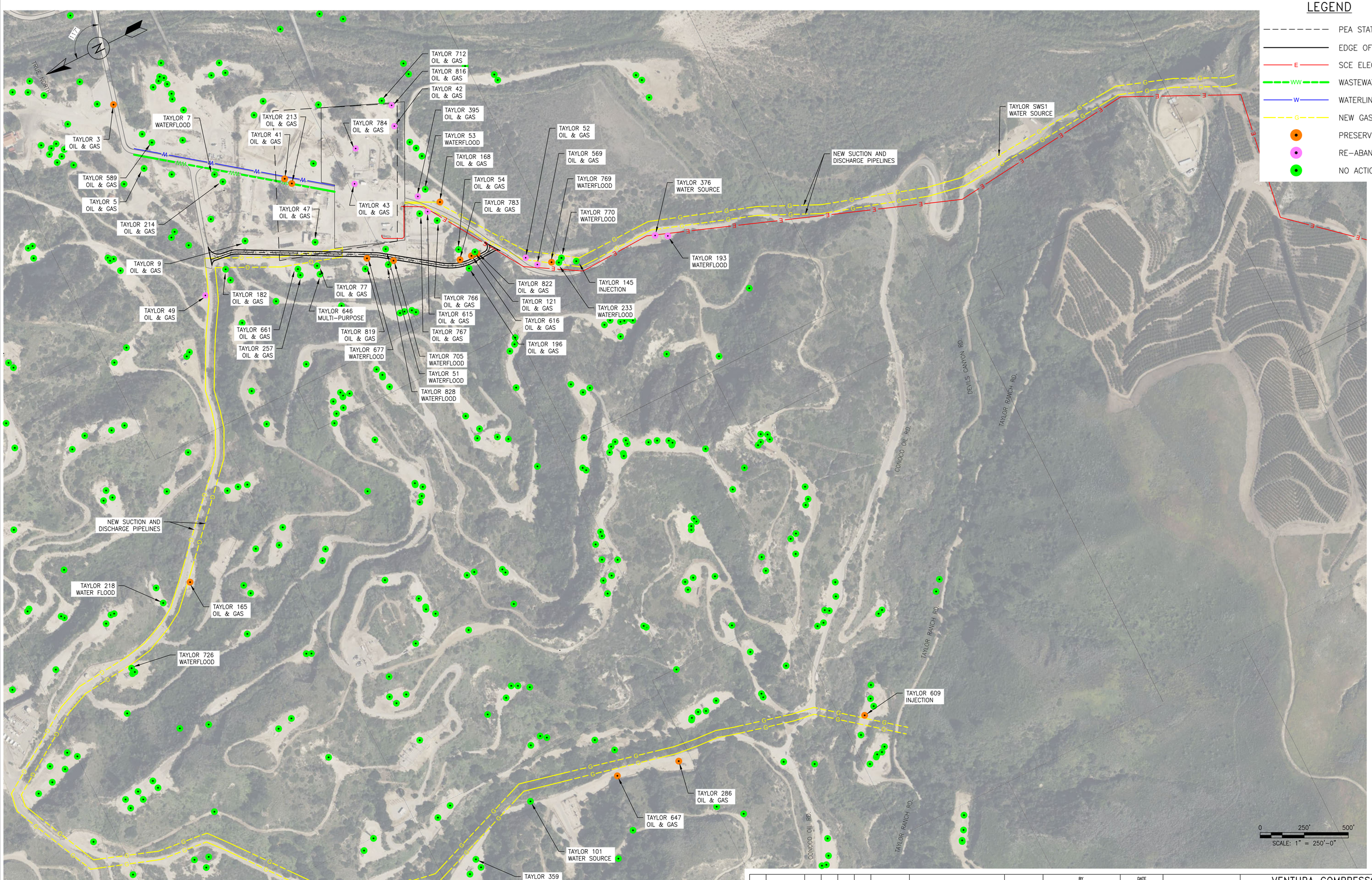

NOTES:
1. THE OIL WELLS TO BE PLUGGED AND RE-ABANDONED WERE DETERMINED BY OTHERS.

REV	DATE	DRAWN	CHECKED	PRJ APV	SCG APV	ENG FILE NO	DESCRIPTION	WOA
0	06/26/2025	MCR	SLH				ISSUED FOR DR-001 RESPONSE	

	BY	DATE
DESIGNED:	S.HOPE	03/10/25
DRAWN:	M.RIZO	03/10/25
CHECKED:	S.HOPE	03/28/25
PROJ APV:		
SCG ENG APV:		
ENG FILE NO:		
WOA:		

SoCalGas
A Sempra Energy utility

DWG CLASS: 9,39 DWG DIST: 114
SCALE: 1" =50'-0"

VENTURA COMPRESSOR STATION MODERNIZATION PROJECT
DEVIL'S CANYON ROAD SITE
CONCEPTUAL PIPELINE ROUTE WITH WELLS

DRAWING NUMBER 152084-7028-D-SKT

REV 0

C:\Users\mcrizo\Burns & McDonnell\SoCalGas Ventura EPC Execution - Documents\CPUC Support\2025 Support\Design\Civil - Structural\CAD\Devils Canyon\152084-7028-D-SKT.dwg, 8/28/2025 4:07 PM, Rizo, Mike C.

DRAWING NUMBER	REFERENCE DRAWING DESCRIPTION
152084-7024-D-SKT	CONCEPTUAL PIPELINE & UTILITY PLAN
152084-7021-D-SKT	CONCEPTUAL OVERALL SURFACING PLAN

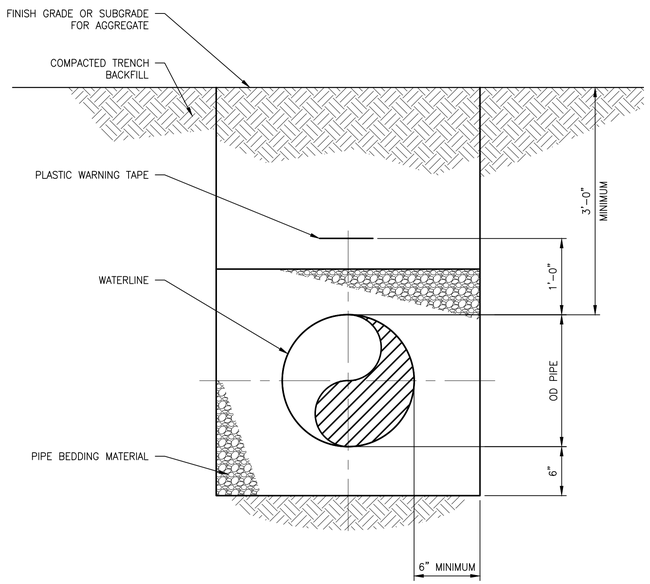

TYPICAL WATER TRENCH

DETAIL 1

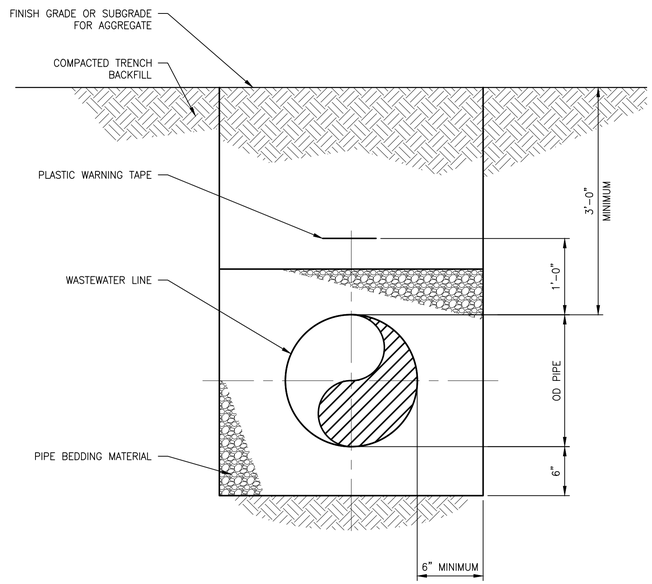

TYPICAL WASTEWATER TRENCH

DETAIL 2

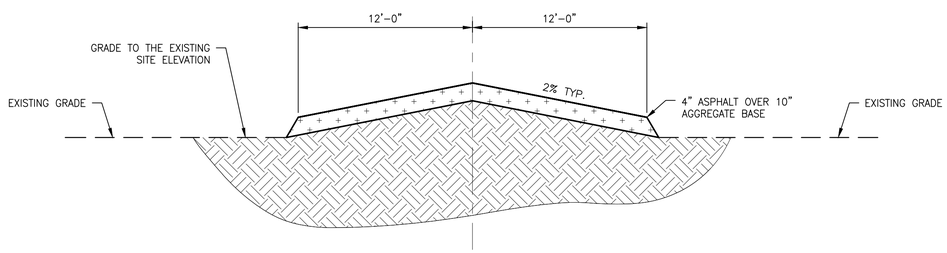

TYPICAL ROAD SECTION

DETAIL 3

NOTES:

1. DETAILS BASED ON BURNS & MCDONNELL DESIGN STANDARDS. VERIFY IN LATER PHASES OF DESIGN.
2. AT ROADWAY CROSSINGS, BACKFILL WITH COMPACTED CRUSHED AGGREGATE BASE ROCK OR FLOWABLE FILL.
3. GRANULAR BEDDING MATERIAL FOR ALL NON-OIL PIPES SHALL BE CRUSHED ROCK CONFORMING TO ASTM C33 COARSE AGGREGATE, SIZE NO. 67.

REV	DATE	DRAWN	CHECKED	PRJ APV	SCG APV	ENG FILE NO	DESCRIPTION	WOA
0	06/26/2025	MCR	JBB				ISSUED FOR DR-001 RESPONSE	

	BY	DATE
DESIGNED:	J.BAKKER	05/13/25
DRAWN:	M.RIZO	05/13/25
CHECKED:	S.HOPE	05/16/25
PROJ APV:		
SCG ENG APV:		
ENG FILE NO:	E15043	
WOA:		

SoCalGas — A Sempra Energy utility

DWG CLASS: 9,39 | DWG DIST: 114

SCALE: NONE

VENTURA COMPRESSOR STATION
MODERNIZATION PROJECT
DEVIL'S CANYON ROAD SITE
ROAD & UTILITY TRENCH DETAILS

DRAWING NUMBER 152084-7121-D-SKT

REV 0

C:\Users\mcrizo\Burns & McDonnell\SoCalGas Ventura EPC Execution - Documents\CPUC Support\2025 Support\Design\Civil - Structural\CAD\Devils Canyon\152084-7121-D-SKT.dwg, 7/7/2025 3:12 PM, Rizo, Mike C.

DRAWING NUMBER	REFERENCE DRAWING DESCRIPTION
152084-7724-D-SKT	CONCEPTUAL PIPELINE & UTILITY PLAN

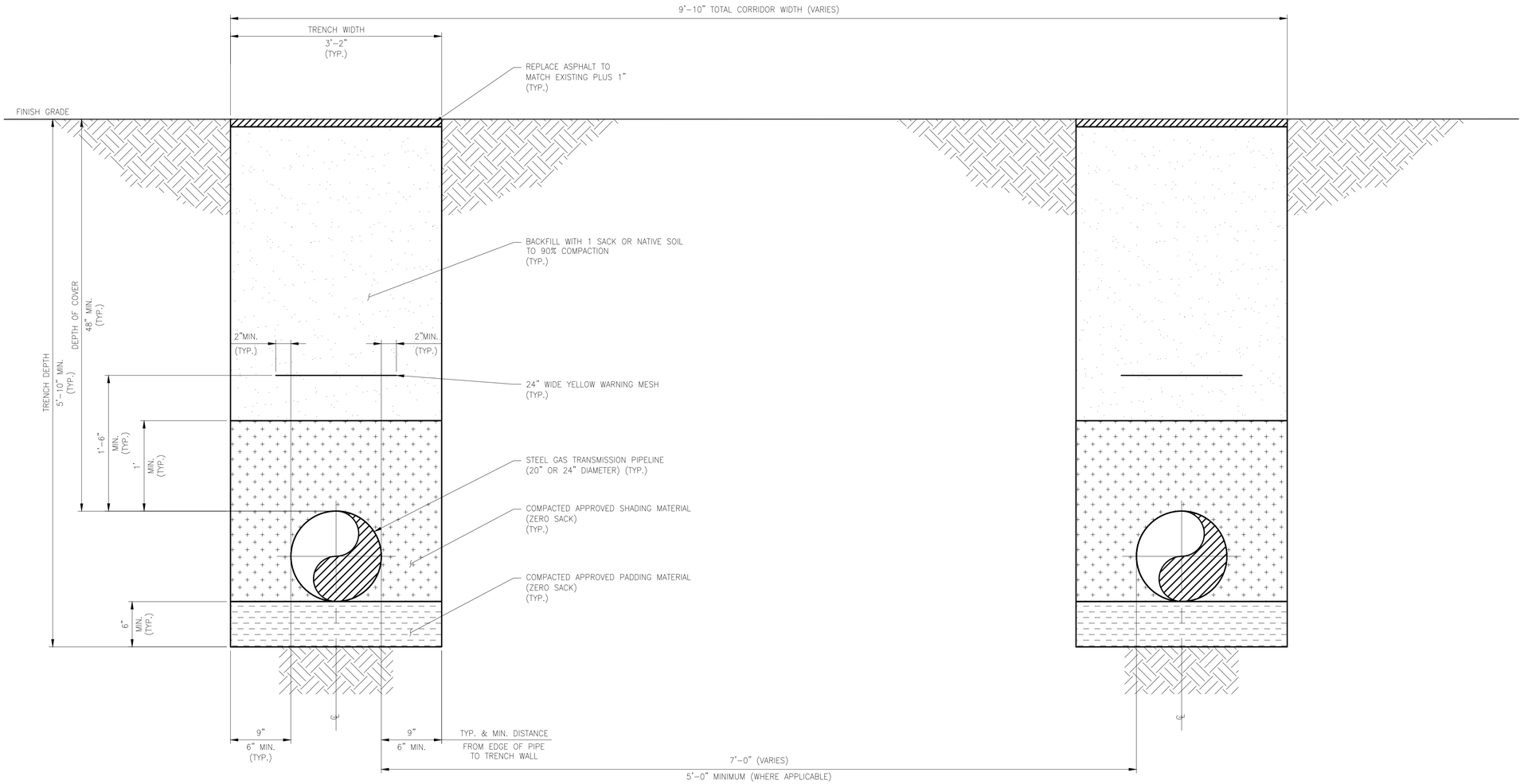

TYPICAL TWO GAS PIPELINES CORRIDOR DETAIL

DETAIL 1

NOTES:

1. DESIGN CODE AND GENERAL REQUIREMENTS:

   A. US DOT 49CFR192 (LATEST EDITION) – TRANSPORTATION OF NATURAL AND OTHER GAS BY PIPELINE
   B. ASME B31.8 (LATEST EDITION) – GAS TRANSMISSION AND DISTRIBUTION PIPING SYSTEMS
   C. CALIFORNIA PUBLIC UTILITY COMMISSION G.O. 112E
   D. FEDERAL OCCUPATIONAL SAFETY AND HEALTH STANDARDS ACT (OSHA)
   E. CALIFORNIA STATE INDUSTRIAL SAFETY ORDERS

REV	DATE	DRAWN	CHECKED	PRJ APV	SCG APV	ENG FILE NO	DESCRIPTION	WOA
0	06/26/2025	MCR	TRM				ISSUED FOR DR-001 RESPONSE	

	BY	DATE
DESIGNED:	M.RIZO	05/13/25
DRAWN:	M.RIZO	05/13/25
CHECKED:	T.McADORY	05/16/25
PROJ APV:		
SCG ENG APV:		
ENG FILE NO:		
WOA:		

SoCalGas
A Sempra Energy utility

DWG CLASS: 9,39 DWG DIST: 114
SCALE: NOT TO SCALE

VENTURA COMPRESSOR STATION
MODERNIZATION PROJECT
DEVIL'S CANYON ROAD SITE
TWO GAS PIPELINES CORRIDOR DETAIL

DRAWING NUMBER 152084-7722-D-SKT

REV 0

C:\Users\mcrizo\Burns & McDonnell\SoCalGas Ventura EPC Execution – Documents\CPUC Support\2025 Support\Design\CAD\Pipelines\Devils Canyon\152084-7722-D-SKT.dwg, 7/7/2025 3:16 PM, Rizo, Mike C.

DRAWING NUMBER	REFERENCE DRAWING DESCRIPTION
152084-7024-D-SKT	CONCEPTUAL PIPELINE & UTILITY PLAN

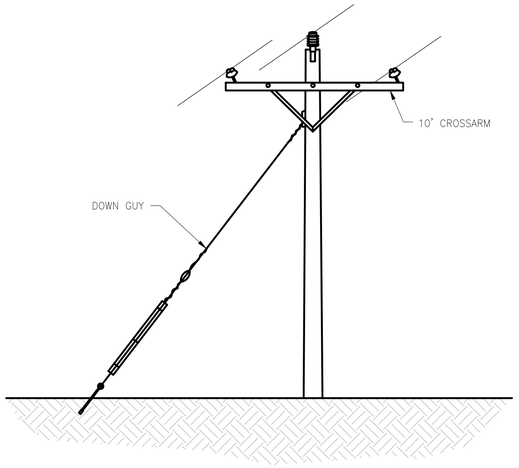

NOTES:

1. TYPICAL TANGENT POLE WITH SIDE GUY IF SLIGHT ANGLE ON THE LINE.
2. MOST ALL TANGENT POLES WILL NOT HAVE SIDE GUYS.
3. SEE DETAIL 4, THIS SHEET FOR POLE HOLE AND ANCHOR DEPTHS.

TANGENT AND ANGLE POLE

DETAIL 1

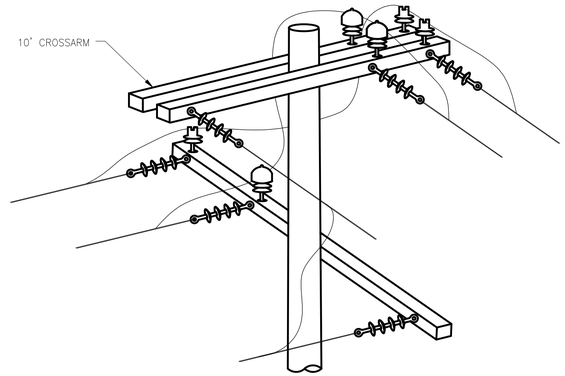

NOTES:

1. DOWN GUYS ARE NOT SHOWN
2. SEE DETAIL 4, THIS SHEET FOR POLE HOLE AND ANCHOR DEPTHS.

CORNER POLE

DETAIL 2

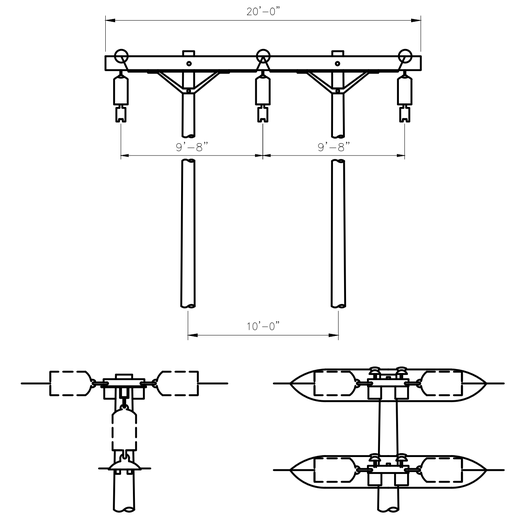

NOTES:

1. SEE DETAIL 4, THIS SHEET FOR POLE HOLE AND ANCHOR DEPTHS.

H-FRAME

DETAIL 3

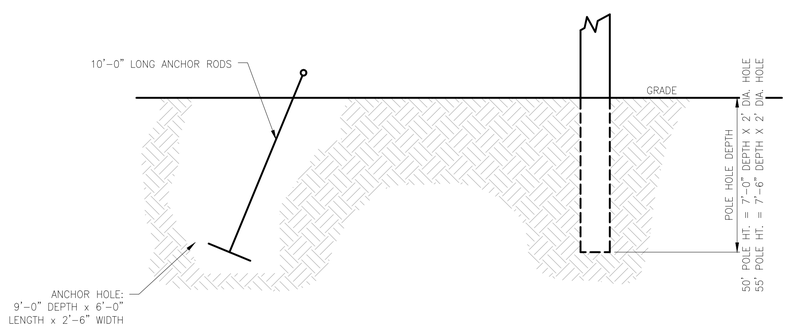

SIDE VIEW

NOTES:

1. SEE DETAIL 5, THIS SHEET FOR POLE HOLE AND ANCHOR PLAN VIEW.

ELECTRICAL POLE ANCHOR & POLE HOLE DEPTH

DETAIL 4

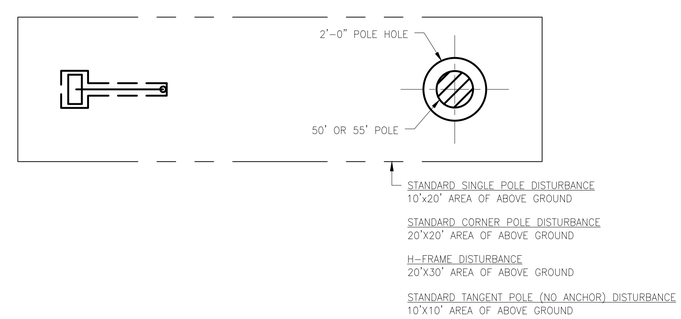

PLAN VIEW

ELECTRICAL POLE LIMITS OF DISTURBANCE

DETAIL 5

NOTES:

1. FOR PRIMARY SERVICE EQUIPMENT SPECIFICATIONS AND REQUIREMENTS, CONSULT SOUTHERN CALIFORNIA EDISON'S ESR MANUAL, SECTIONS 19.0 THROUGH 20.10 IN CHAPTER ESR-7, FIGURE 7-1.

REV	DATE	DRAWN	CHECKED	PRJ APV	SCG APV	ENG FILE NO	DESCRIPTION	WOA
0	06/26/2025	MCR	JAR				ISSUED FOR DR-001 RESPONSE	

	BY	DATE
DESIGNED:	J.RIFFEL	05/10/25
DRAWN:	M.RIZO	05/10/25
CHECKED:	S.HOPE	05/11/25
PROJ APV:		
SCG ENG APV:		
ENG FILE NO:		
WOA:		

DWG CLASS: 9,39 DWG DIST: 114
SCALE: NOT TO SCALE

SoCalGas
A Sempra Energy utility

VENTURA COMPRESSOR STATION
MODERNIZATION PROJECT
DEVIL'S CANYON ROAD SITE
ELECTRICAL DISTR. INTERCONNECT PRELIMINARY DETAILS

DRAWING NUMBER 152084-5510-D-SKT REV 0

C:\Users\mcrizo\Burns & McDonnell\SoCalGas Ventura EPC Execution - Documents\CPUC Support\2025 Support\Design\CAD\Elec\OH ELECTRICAL\152084-5510-D-SKT.dwg, 8/28/2025 1:29 PM, Rizo, Mike C.